ENGINEERING TOMORROW

Data Sheet

Fan Drive Motor

Ultra Compact Reversing/Proportional Motor

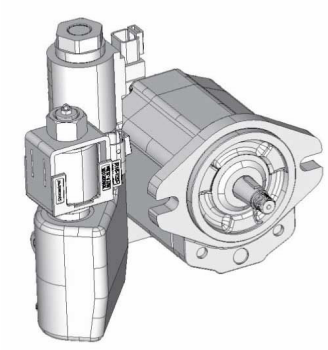

Danfoss has built up a wealth of experience with electrohydraulic Fan Drive systems. Vehicle designers require compact and integrated solutions for flexible mounting of the cooling system.

The Fan Drive Motor provides proportional speed control with reversing capability in an ultra-compact package size.

The Ultra Compact Reversing/Proportional Fan Drive Motor is designed for fan drive systems requiring proportional speed control with reversing capability in an ultra-compact package size.

- Unique design minimizes axial length
- Cartridge valves optimized for fan drive applications minimize pressure drop and offer greater power savings
- Pressure capability up to 210 bar (3045 PSI)
- Speeds up to 3500 rpm
- Intermittent fluid temperature up to 110°C [230°F] with a minimum viscosity of 10 mm^2/s [60 SUS]

Features

- High performance, pressure balanced aluminum gear motor
- Integrated dust cover to protect the shaft seal
- Durable aluminum casting optimized to provide short length and minimize weight
- Proportional pressure relief valve to modulate fan speed
- Direct acting cartridge valve to reverse motor rotation
- Anti-cavitation vales to bypass flow during fan wind down
- DEUTSCH connector DT 04 (IP69K) and optional DIN 43650 connector
- PLUS+1® Compliant

Comprehensive technical literature is online at *www.danfoss.com*

Technical specifications

Parameters	Unit	8.0	011	014	017	019	022	025
Displacement	cm^3/rev	8.4	10.8	14.4	16.8	19.2	22.8	25.2
	in^3/rev	0.51	0.66	0.88	1.03	1.17	1.39	1.54
Rated Pressure	bar	210	210	210	210	210	180	160
	psi	3046	3046	3046	3046	3046	2610	2320
Peak Pressure	bar	230	230	230	230	230	200	180
	psi	3336	3336	3336	3336	3336	2900	2610
Maximum Speed	rpm	3500	3500	3500	3500	3200	3200	3200
Dimension "A"	mm	76	80	86	90	94	100	104

Schematic

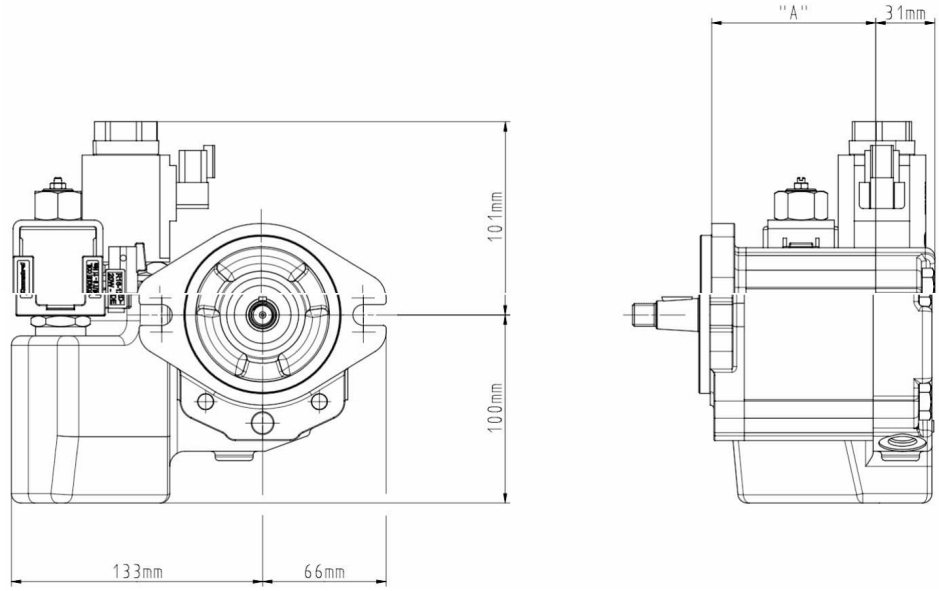

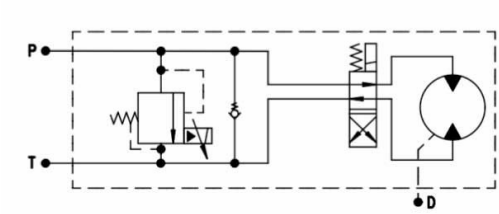

Danfoss can accept no responsibility for possible errors in catalogues, brochures and other printed material. Danfoss reserves the right to alter its products without notice. This also applies to products already on order provided that such alterations can be made without subsequent changes being necessary in specifications already agreed.
All trademarks in this material are property of the respective companies. Danfoss and the Danfoss logotype are trademarks of Danfoss A/S. All rights reserved.