ENGINEERING TOMORROW

Relief Valves Technical Information

Quick Reference

Thermal Relief	Model No.	Cavity	Description	Flow	Pressure	Page
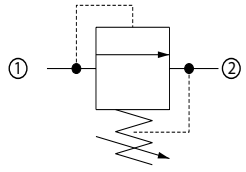	**CP208-4**	**SDC08-2**	Relief Valve, Thermal Relief, Poppet Type	1.1 l/min [0.3 US gal/min]	415 bar [6000 psi]	**RV - 6**

Direct Acting	Model No.	Cavity	Description	Flow	Pressure	Page
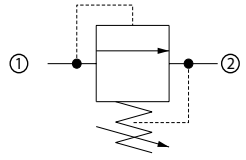	**CP208-3**	**SDC08-2**	Relief Valve, Direct Acting, Poppet Type	30 l/min [8 US gal/min]	250 bar [3600 psi]	**RV - 7**
	CP200-3	**SDC10-2**		40 l/min [11 US gal/min]	250 bar [3600 psi]	**RV - 8**

Direct Acting	Model No.	Cavity	Description	Flow	Pressure	Page
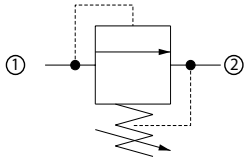	**RV08-DR**	**SDC08-2**	Relief Valve, Direct Acting, Dampening, Poppet Type	30 l/min [8 US gal/min]	250 bar [3600 psi]	**RV - 9**
	VEN 06	**NCS06/2**		40 l/min [11 US gal/min]	250 bar [3600 psi]	**RV - 10**
	VME 06	**VME06**		40 l/min [11 US gal/min]	315 bar [4500 psi]	**RV - 11**
	VME 07	**VME07**		50 l/min [13 US gal/min]	315 bar [4500 psi]	**RV - 12**
	VME 08	**VME08**		80 l/min [21 US gal/min]	315 bar [4500 psi]	**RV - 13**

Differential Area	Model No.	Cavity	Description	Flow	Pressure	Page
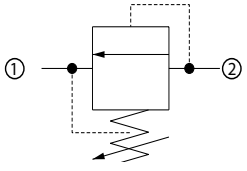	**CP200-2**	**SDC10-2**	Relief Valve, Differential Area, Poppet Type,	40 l/min [11 US gal/min]	350 bar [5075 psi]	**RV - 14**
	CP208-1	**SDC08-2**		40 l/min [11 US gal/min]	250 bar [3600 psi]	**RV - 15**
	CP200-1	**SDC10-2**		75 l/min [20 US gal/min]	250 bar [3600 psi]	**RV - 16**
	CP201-1	**CP12-2**		150 l/min [40 US gal/min]	250 bar [3600 psi]	**RV - 17**

Direct Acting	Model No.	Cavity	Description	Flow	Pressure	Page
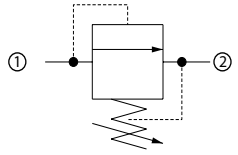	**CP210-1**	**SDC10-2**	Relief Valve, Direct Acting, Spool Type,	45 l/min [12 US gal/min]	210 bar [3000 psi]	**RV - 18**
	CP211-1	**CP12-2**		75 l/min [20 US gal/min]	40 bar [600 psi]	**RV - 19**

Pilot Operated	Model No.	Cavity	Description	Flow	Pressure	Page
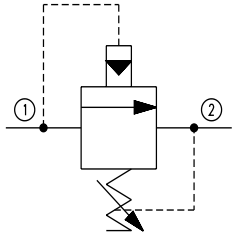	**CP210-2**	**SDC10-2**	Relief Valve, Pilot Operated, Spool Type	115 l/min [30 US gal/min]	350 bar [5075 psi]	**RV - 20**
	CP211-2	**CP12-2**		190 l/min [50 US gal/min]	350 bar [5075 psi]	**RV - 21**

Pilot Operated	Model No.	Cavity	Description	Flow	Pressure	Page
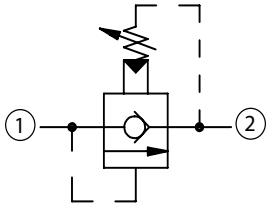	**RV10-POP**	**SDC10-2**	Relief Valve, Pilot Operated, Poppet Type, with Free Reverse Flow	120 l/min [32 US gal/min]	250 bar [3625 psi]	**RV - 22**

Bi-Directional	Model No.	Cavity	Description	Flow	Pressure	Page
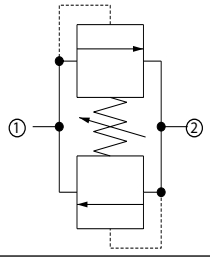	**CP200-7**	**SDC10-2**	Relief Valve, Bi-directional	40 l/min [11 US gal/min]	250 bar [3600 psi]	**RV - 23**

Differential Area	Model No.	Cavity	Description	Flow	Pressure	Page
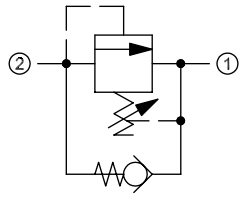	**VSB 06-EN**	**NCS06/2**	Relief Valve, Differential Area, Poppet Type with Reverse Free Flow Check	80 l/min [21 US gal/min]	350 bar [5075 psi]	**RV - 24**
	VSB 12-EN	**NCS12/2**		140 l/min [37 US gal/min]	350 bar [5075 psi]	**RV - 25**

Differential Area	Model No.	Cavity	Description	Flow	Pressure	Page
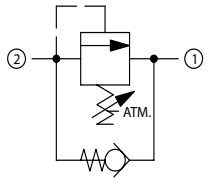	**VSB 06-CN**	**NCS06/2**	Relief Valve, Differential Area, Poppet Type with Reverse Free Flow Check, Atmospheric Venting	80 l/min [21 US gal/min]	350 bar [5075 psi]	**RV - 26**
	VSB 12-CN	**NCS12/2**		140 l/min [37 US gal/min]	350 bar [5075 psi]	**RV - 27**

Cross-Over	Model No.	Cavity	Description	Flow	Pressure	Page
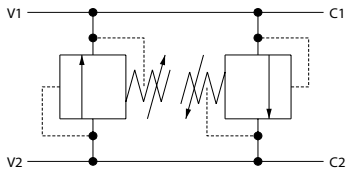	**VA-E 06**	none	Relief Valve, Cross-Over, Catalog HIC	40 l/min [11 US gal/min]	210 bar [3045 psi]	**RV - 28**
	CP220-1	none		75 l/min [20 US gal/min]	250 bar [3600 psi]	**RV - 29**
	CP221-1	none		150 l/min [40 US gal/min]	250 bar [3600 psi]	**RV - 30**

APPLICATIONS

Relief valves are used as pressure limiting devices to protect hydraulic systems and components. They are available in direct-acting poppet, differential area poppet, bi-directional poppet, and pilot-operated spool types.

Relief valves

OPERATION

Direct-acting poppet
The direct-acting poppet blocks flow from 1 to 2 until sufficient pressure is present at 1 to force the spring-opposed poppet from it's seat. This pressure is commonly known as the crack pressure. The valve will remain open until the pressure drops to a level allowing the spring to close the valve. This pressure is known as the re-seat pressure and is typically 70-80% of the crack pressure. The difference between crack and re-seat pressure is commonly referred to as hysteresis.

Direct acting poppet relief valve

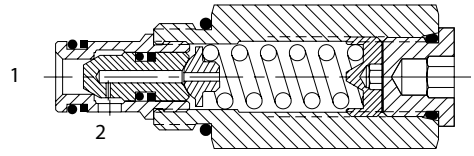

Differential-area poppet
The differential area poppet operates in the same manner except flow is blocked from 2 to 1 until sufficient pressure is present at 2 to force the spring-opposed poppet from it's seat.

Advantages of direct-acting poppet and differential area poppet relief valves are:

- Fast response
- Contamination tolerant
- Low leakage
- Low cost

Differential area poppet relief valve

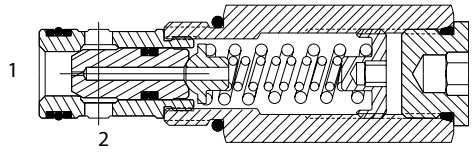

OPERATION (continued)

Because of these features some common applications for direct-acting and differential area poppet relief valves are:

- Main system relief valve if flow is relatively constant, or as a safety relief valve for "spike clipping" to protect components from overpressure
- Work port cross-over relief to protect a cylinder or motor from overpressure

System Relief Valve

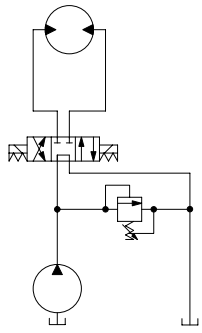

Work Port Cross-Relief Valves

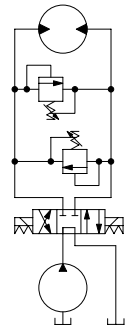

Bi-directional poppet

The bi-directional poppet is a dual cross-over relief in a single cartridge. When pressure at 1 exceeds the nominal setting, the lower poppet acts as a direct-acting relief valve and opens flow from 1 to 2. When pressure at 2 exceeds the nominal setting, the upper poppet acts as a differential area relief valve and opens flow from 2 to 1 . Note that the valve is designed so that the crack pressure is the same in either direction

Bi-directional poppet relief valve

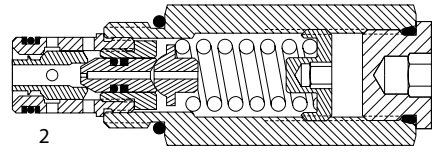

A common application for a bi-directional relief valve is as a work port cross-over relief where one bi-directional valve can replace two direct-acting valves.

Pilot operated spool

The pilot operated spool blocks flow from 1 to 2 until sufficient pressure is present at 1 to force the pilot poppet off it's seat. This creates a pressure differential across the spool that causes the spool to shift and open flow from 1 to 2.

Pilot operated spool relief valve

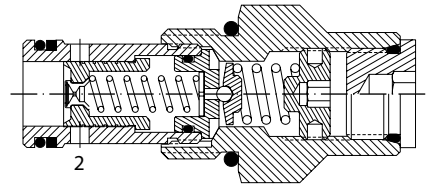

Advantages of pilot-operated relief valves are:

- Smooth, stable response
- High flow and high pressure capability
- Precise pressure control with varying flow rates. Low pressure rise
- Low hysteresis

A common application for pilot-operated relief valves is as a main system relief where high pressure or flow capability and/or extremely precise pressure control is required.

ENGINEERING
TOMORROW

Relief Valves Technical Information

Thermal Relief

CP208-4

OPERATION

This is a direct-acting poppet type thermal relief valve that relieves from 1 to 2.

SPECIFICATIONS

Theoretical performance

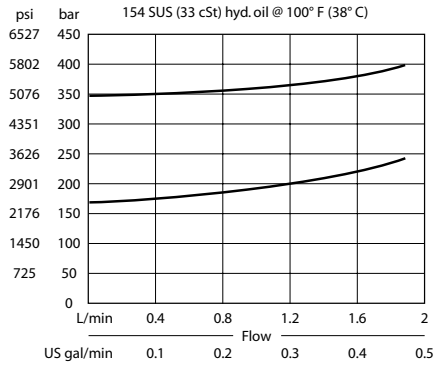

Schematic

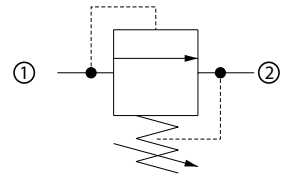

Specifications

Rated pressure	415 bar [6000 psi]
Rated flow	1.1 l/min [0.3 US gal/min]
Leakage	10 drops/min @ 80% of pressure setting
Weight	0.23 kg [0.50 lb]
Cavity	**SDC08-2**

DIMENSIONS

mm [in]

Cross-sectional view

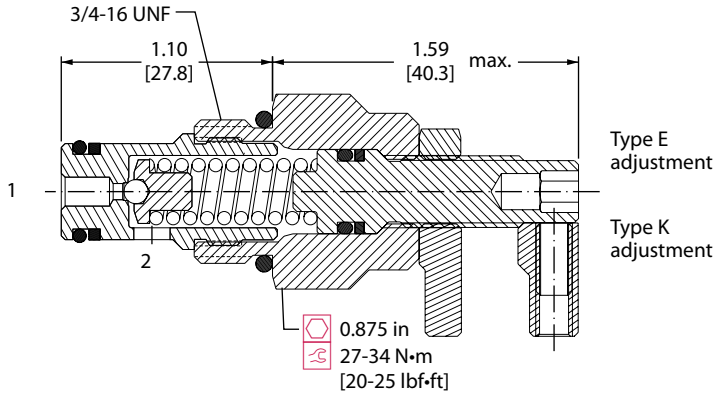

ORDERING INFORMATION

CP208-4-B-4S-E-C-300

Seals
B = Buna-N — Seal kits 120221
V = Viton — 120222

Crack pressure
Code x 10 = psi
Example: 300 = 3000 psi

Housing and ports / **Housing P/N**

0	=	No Housing	No Housing
DG2B	=	Al, 1/4 BSP	SDC08-2-DG-2B
DG3B	=	Al, 3/8 BSP	SDC08-2-DG-3B
4S	=	Al, #4 SAE	CP08-2-4S
6S	=	Al, #6 SAE	CP08-2-6S

Other housings available

Adjustment ranges

	bar	psi
A =	2-103	[30-1500]
Standard	207	[1000]
B =	7-207	[100-3000]
Standard	103	[1500]
C =	69-414	[1000-6000]
Standard	207	[3000]

Adjustment options
E = External
K = Knob

ENGINEERING
TOMORROW

Relief Valves Technical Information

Direct Acting

CP208-3

OPERATION

This is a direct-acting poppet type relief valve that relieves from 1 to 2.

SPECIFICATIONS

Theoretical performance

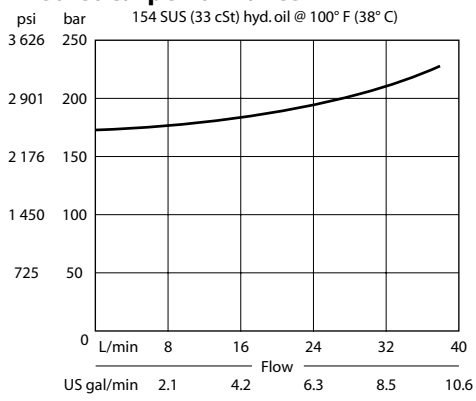

Schematic

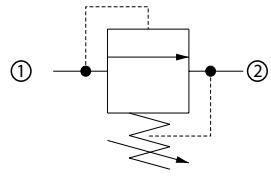

Specifications

Rated pressure	250 bar [3600 psi]
Rated flow	30 l/min [8 US gal/min]
Leakage	10 drops/min @ 80% of pressure setting
Weight	0.15 kg [0.32 lb]
Cavity	**SDC08-2**

DIMENSIONS

mm [in]

Cross-sectional view

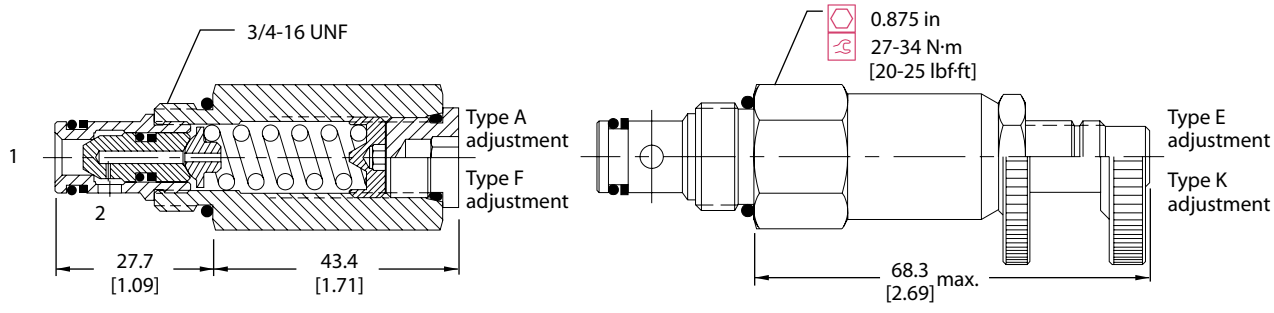

ORDERING INFORMATION

CP208 - 3 - B - 6S - A - C - 150

Seals
B = Buna-N
V = Viton

Seal Kit
120221
120222

Housing and ports

			Housing P/N
0	=	No Housing	No Housing
DG2B	=	Al, 1/4 BSP	SDC08-2-DG-2B
DG3B	=	Al, 3/8 BSP	SDC08-2-DG-3B
4S	=	Al, #4 SAE	CP08-2-4S
6S	=	Al, #6 SAE	CP08-2-6S

Other housings available

Adjustment option
A = Internal
E = External
F = Tamper resistant
K = Knob

Crack pressure
Code x 10 = psi
Example: 150 = 1500 psi

Pressure range

	bar	[psi]
A =	7-69	[100-1000]
Standard	28	[400]
B =	14-138	[200-2000]
Standard	69	[1000]
C =	35-248	[500-3600]
Standard	103	[1500]

ENGINEERING
TOMORROW

Relief Valves Technical Information
Direct Acting
CP200-3

OPERATION

This is a direct-acting poppet type relief valve that relieves from 1 to 2.

SPECIFICATIONS

Theoretical performance

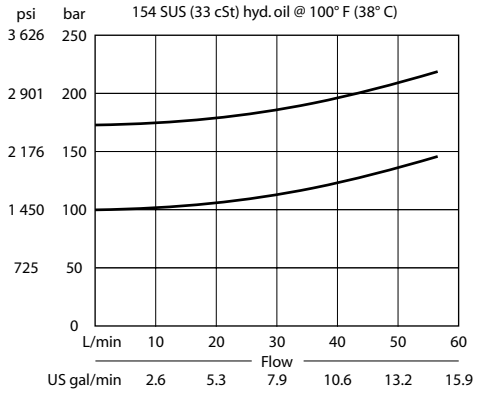

Schematic

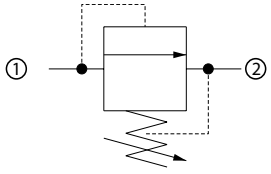

Specifications

Rated pressure	250 bar [3600 psi]
Rated flow	40 l/min [11 US gal/min]
Leakage	10 drops/min @ 80% of pressure setting
Weight	0.21 kg [0.47 lb]
Cavity	**SDC10-2**

DIMENSIONS

mm [in]

Cross-sectional view

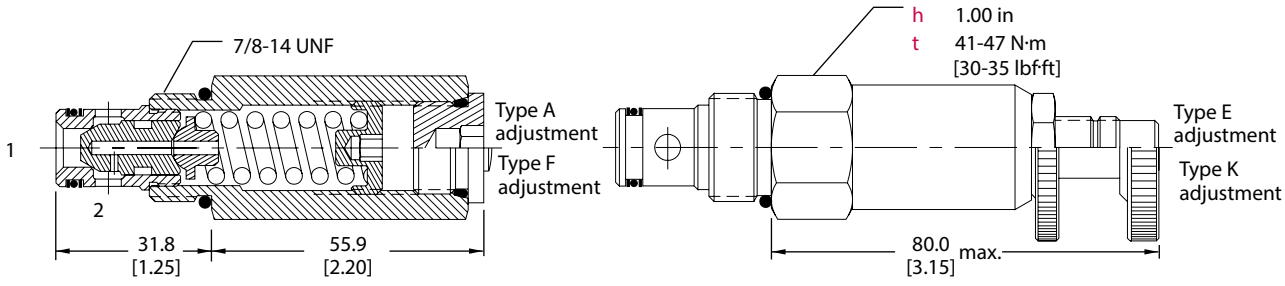

ORDERING INFORMATION

CP200 - 3 - B - 6S - A - C - 150

Seals
B = Buna-N
V = Viton

Seal kit
120073
120074

Housing and port s

			Housing P/N
0	=	No Housing	No Housing
DG3B	=	Al, 3/8 BSP	SDC10-2-DG-3B
DG4B	=	Al, ½ BSP	SDC10-2-DG-4B
6S	=	Al, #6 SAE	CP10-2-6S
8S	=	Al, #8 SAE	CP10-2-8S

Other housings available

Adjustment option
A = Internal
E = External
F = Tamper resistant
K = Knob

Crack pressure
Code x 10 = psi
Example: 150 = 1500 psi

Pressure range

	bar	[psi]
A =	7-69	[100-1000]
Standard	28	[400]
B =	17-172	[250-2500]
Standard	69	[1000]
C =	41-248	[600-3600]
Standard	103	[1500]

ENGINEERING
TOMORROW

Relief Valves Technical Information

Direct Acting

RV08-DR

OPERATION

This is a direct-acting, poppet-type relief valve that relieves from 1 to 2. It features a highly damped poppet for smooth and stable response.

SPECIFICATIONS

Theoretical performance

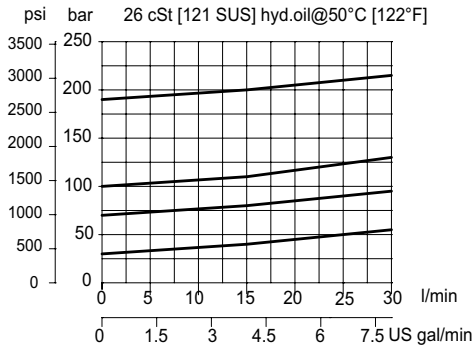

Schematic

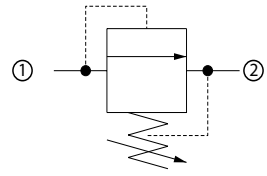

Specifications

Rated pressure	250 bar [3600 psi]
Rated flow	30 l/min [8 US gal/min]
Leakage	10 drops/min @ 80% of pressure setting
Weight	0.10 kg [0.22 lb]
Cavity	**SDC08-2**

DIMENSIONS

mm [in]

Cross-sectional view

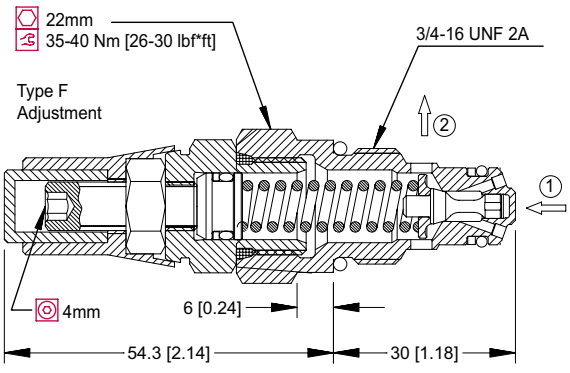

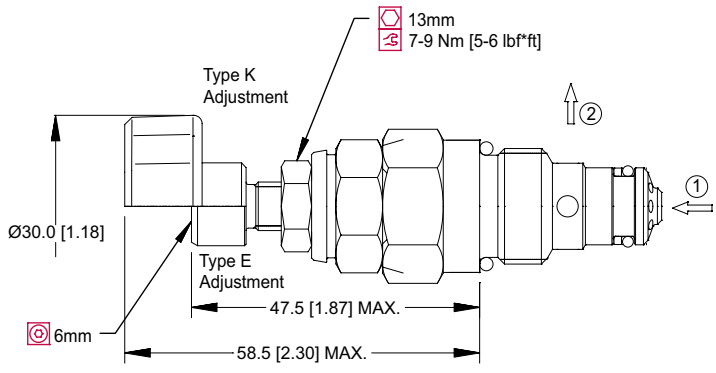

ORDERING INFORMATION

RV08-DR-1-E-XXX-B-4S

Pressure range
1 = 20-80 Bar [290-1150 psi]
2 = 35-160 Bar [500-2300 psi]
3 = 60-250 Bar [870-3600 psi]

Adjustment option
E = External
F = Tamper resistant
K = Knob

Crack pressure
Code = Setting in Bar
XXX = No specific setting

Housing and ports

			Housing P/N
00	=	No Housing	No Housing
DG2B	=	Al, 1/4 BSP	SDC08-2-DG-2B
DG3B	=	Al, 3/8 BSP	SDC08-2-DG-3B
4S	=	Al, #4 SAE	CP08-2-4S
6S	=	Al, #6 SAE	CP08-2-6S

Other housings available

Seals

	Seal Kit
B = Buna-N	354000119
V = Viton	354000219

Relief Valves Technical Information
Direct Acting
VEN 06

OPERATION

This is a direct-acting, poppet-type relief valve that relieves from 1 to 2. It features a highly damped poppet for smooth and stable response.

SPECIFICATIONS

Theoretical performance

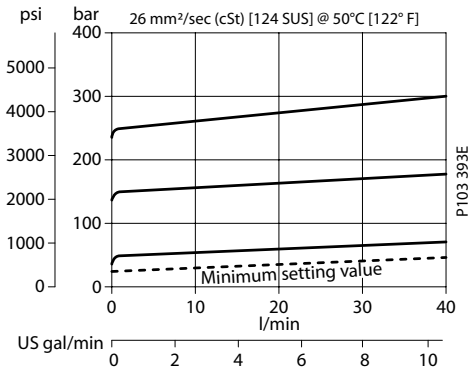

Schematic

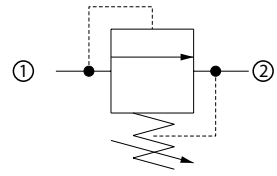

Specifications

Rated pressure	315 bar [4500 psi]
Rated flow	40 l/min [11 US gal/min]
Weight	0.20 kg [0.44 lb]
Cavity	**NCS06/2**

DIMENSIONS

mm [in]

Cross-sectional view

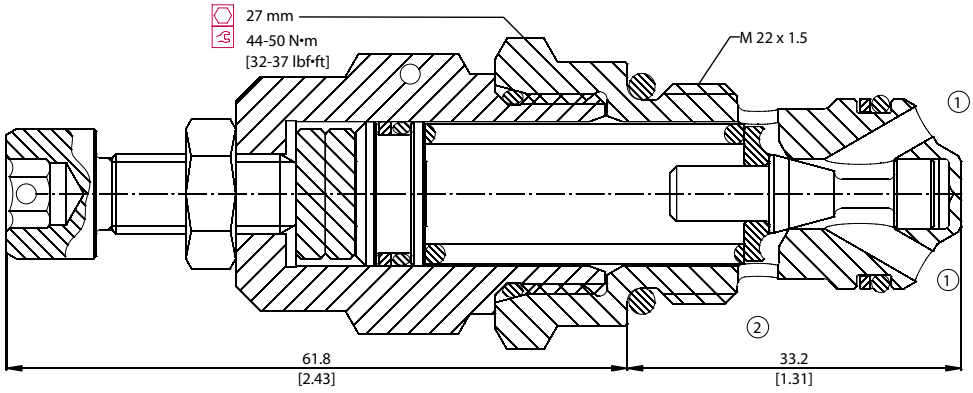

ORDERING INFORMATION

VEN 06 - M - 1 - DG3/8 - V - XXX

Type of adjustment
- EN = External screw
- M = Handwheel

Setting range
- 1 = 20 - 80 bar [290 - 1160 psi]
- 2 = 35 - 160 bar [508 - 2321 psi]
- 3 = 70 - 315 bar [1015 - 4569 psi]

Seals
- V = Viton seals
- Omit = Buna-N

Seal kit
- 230000380
- 230000060

Housing and ports / Housing P/N

0	= No Housing	No Housing
DG3/8	= AL, 3/8 BSP	NCS06/2-DG-3/8
DG1/2	= AL, 1/2 BSP	NCS06/2-DG-1/2
DG6S	= AL, #6 SAE	NCS06/2-DG-6S
DG8S	= AL, #8 SAE	NCS06/2-DG-8S

Other housings available

To order this valve with a specific factory setting, contact your Danfoss ICS representative

Relief Valves Technical Information
Direct Acting
VME 06

OPERATION

This is a direct-acting, poppet-type relief valve that relieves from 1 to 2. It features a highly damped poppet for smooth and stable response.

SPECIFICATIONS

Theoretical performance

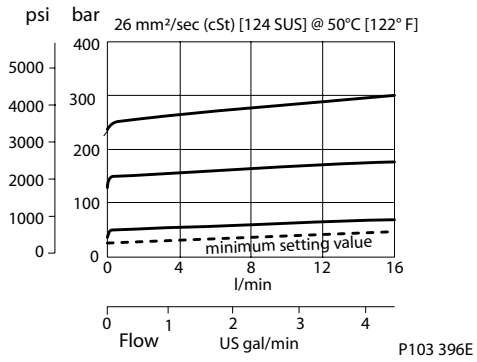

Schematic

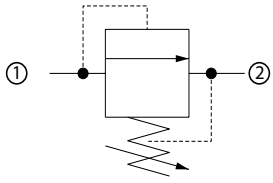

Specifications

Rated pressure	315 bar [4500 psi]
Rated flow	40 l/min [11 US gal/min]
Weight	0.13 kg [0.29 lb]
Cavity	**VME06**

DIMENSIONS

mm [in]

Cross-sectional view

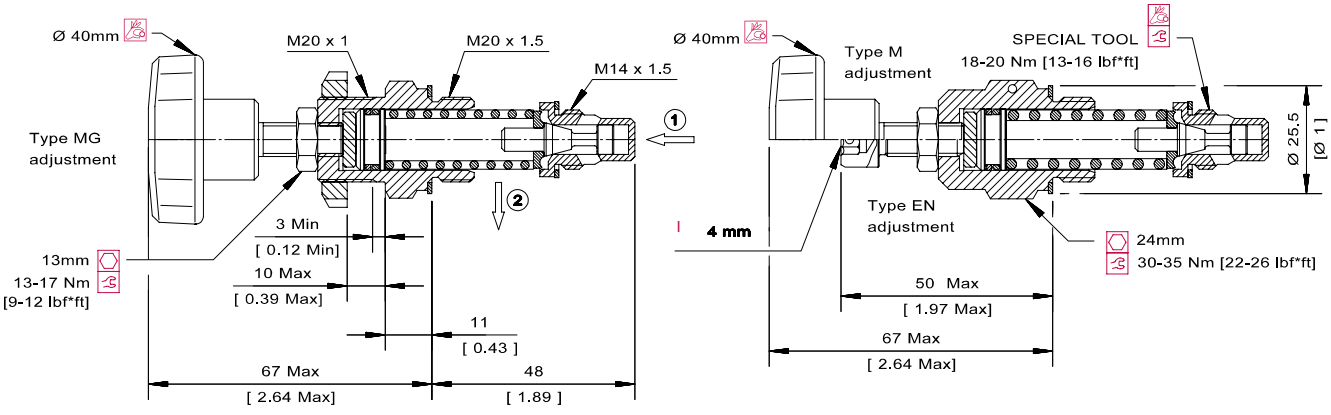

ORDERING INFORMATION

VME 06 - EN - 2 - DG3/8 - V - XXX

Adjustment
- EN = External screw
- M = Handwheel
- MG = Handwheel (panel mounted)

Setting range
- 1 = 25 - 70 bar [363-1015 psi]
- 2 = 35 - 170 bar [508-2466 psi]
- 3 = 70 - 315 bar [1015-4569 psi]

Seals
- V = Viton seals
- Omit = Buna-N

Housing and ports

			Housing P/N
00	=	No Housing	No Housing
DG3/8	=	Al, 3/8 BSP	VME06-DG-3/8
DG6S	=	Al, #6 SAE	VME06-DG-6S

Other housings available

To order this valve with a specific factory setting, contact your Danfoss ICS representative

ENGINEERING
TOMORROW

Relief Valves Technical Information

Direct Acting

VME 07

OPERATION

This is a direct-acting, poppet-type relief valve that relieves from 1 to 2. It features a highly damped poppet for smooth and stable response.

SPECIFICATIONS

Theoretical performance

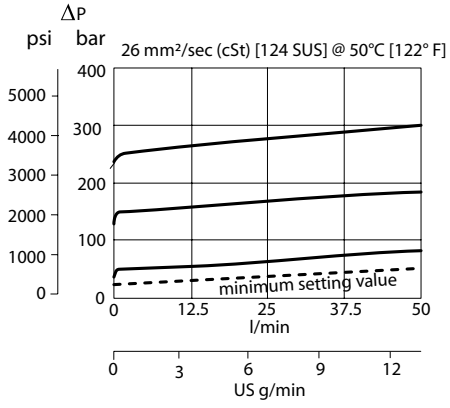

Schematic

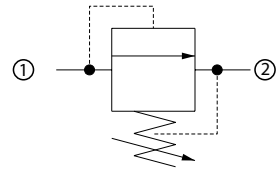

Specifications

Rated pressure	315 bar [4500 psi]
Rated flow	50 l/min [13 US gal/min]
Weight	0.20 kg [0.44 lb]
Cavity	**VME07**

DIMENSIONS

mm [in]

Cross-sectional view

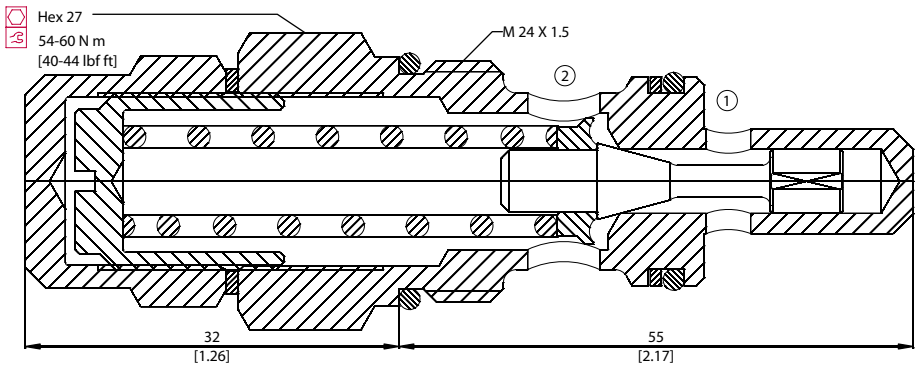

ORDERING INFORMATION

VM E 07 - E- 2 - DG1/2 - V - XXX

Adjustment
E = Internal screw
M = Handwheel

Setting r ange
1 = 25 - 80 bar [363-1160 psi]
2 = 35 - 180 bar [508-2611 psi]
3 = 70 - 315 bar [1015-4569 psi]

Seals
V = Viton
Omit = Buna-N

Seal kit
Consult factory
Consult factory

Housing and ports
00 = No Housing
DG1/2 = Al, 1/2 BSP
DG8S = Al, #8 SAE
Other housings available

Housing P/N
No Housing
VME07-DG-1/2
VME07-DG-8S

To order this valve with a specific factory setting, contact your Danfoss ICS representative.

Relief Valves Technical Information
Direct Acting
VME 08

OPERATION

This is a direct-acting, poppet-type relief valve that relieves from 1 to 2. It features a highly damped poppet for smooth and stable response.

SPECIFICATIONS

Theoretical performance

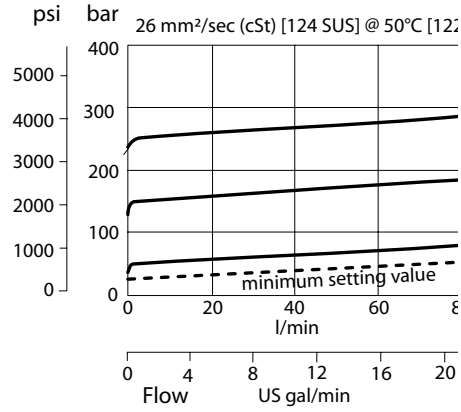

Schematic

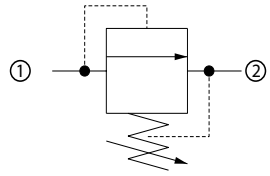

Specifications

Rated pressure	315 bar [4500 psi]
Rated flow	80 l/min [21 US gal/min]
Weight	0.35 kg [0.77 lb]
Cavity	**VME08**

DIMENSIONS

mm [in]

Cross-sectional view

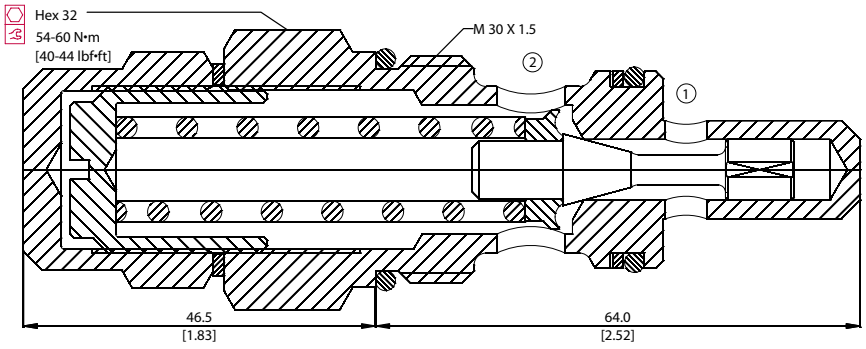

ORDERING INFORMATION

VME 08 - E- 2 - DG3/4 - V -XXX

Adjustment
- E = Internal screw
- M = Handwheel

Setting range
- 1 = 25 - 80 bar [363-1160 psi]
- 2 = 35 - 160 bar [508-2321 psi]
- 3 = 70 - 315 bar [1015-4569 psi]

Seals
- V = Viton — Seal kit: Consult factory
- Omit = Buna-N — Consult factory

Housing and ports

			Housing P/N
00	=	No Housing	No Housing
DG3/4	=	Al, 3/4 BSP	VME08-DG-3/4
DG12S	=	Al, #12 SAE	VME08-DG-12S

Other housings available

To order this valve with a specific factory setting, contact your Danfoss ICS representative

Relief Valves Technical Information
Differential Area
CP200-2

OPERATION

This is a direct acting differential area poppet type relief valve that relieves from 2 to 1.

SPECIFICATIONS

Theoretical performance

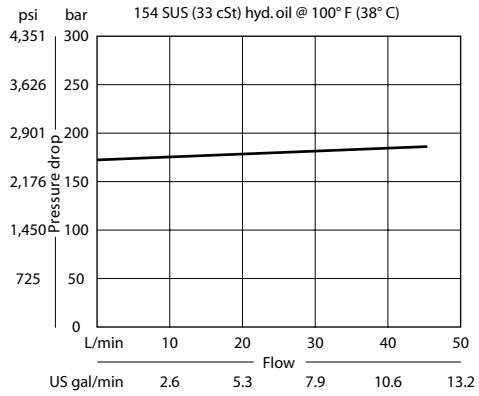

Schematic

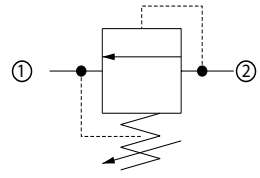

Specifications

Rated pressure	350 bar [5075 psi]
Rated flow	40 l/min [11 US gal/min]
Leakage	10 drops/min @ 80% of crack pressure
Weight	0.21 kg [0.46 lb]
Cavity	**SDC10-2**

DIMENSIONS

mm [in]

Cross-sectional view

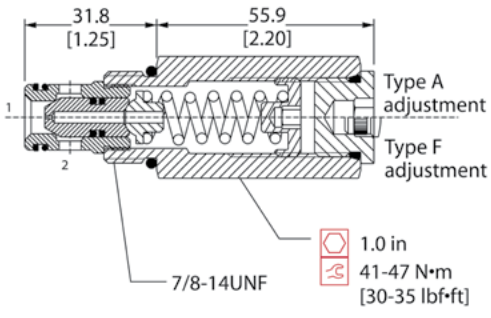

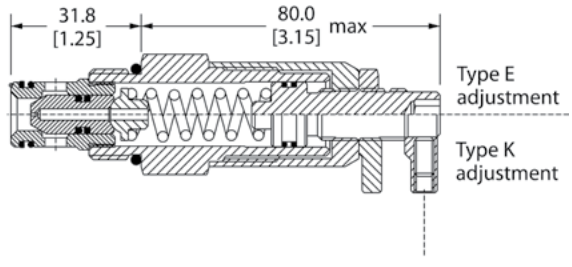

ORDERING INFORMATION

CP200-2- B - 6S - E - D - 150

Seals

	Seal kits
B = Buna-N	120015
V = Viton	120016

Housing and ports

0	=	No Housing
DG3B	=	Al, 3/8 BSP
DG4B	=	Al, 1/2 BSP
6S	=	Al, #6 SAE
8S	=	Al, #8 SAE

Other housings available

Housing P/N

No Housing
SDC10-2-DG-3B
SDC10-2-DG-4B
CP10-2-6S
CP10-2-8S

Adjustment options

A = Internal
F = Tamper resistant
E = External
K = Knob

Adjustment ranges

	bar	psi
D =	69-345	[1000-5000]
Standard	103	[1500]

Crack pressure

Code x 10 = psi
Example: 150 = 1500 psi

ENGINEERING
TOMORROW

Relief Valves Technical Information
Differential Area
CP208-1

OPERATION

This is a direct acting differential area poppet type relief valve that relieves from 2 to 1.

SPECIFICATIONS

Theoretical performance

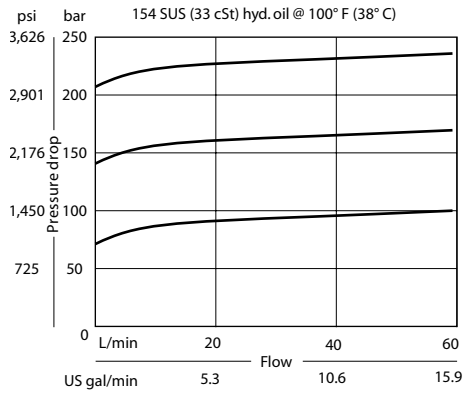

Schematic

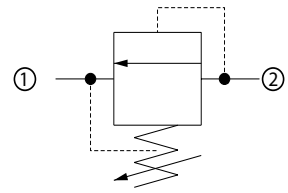

Specifications

Rated pressure	250 bar [3600 psi]
Rated flow	40 l/min [11 US gal/min]
Leakage	10 drops/min @ 80% of pressure setting
Weight	0.15 kg [0.32 lb]
Cavity	**SDC08-2**

DIMENSIONS

mm [in]

Cross-sectional view

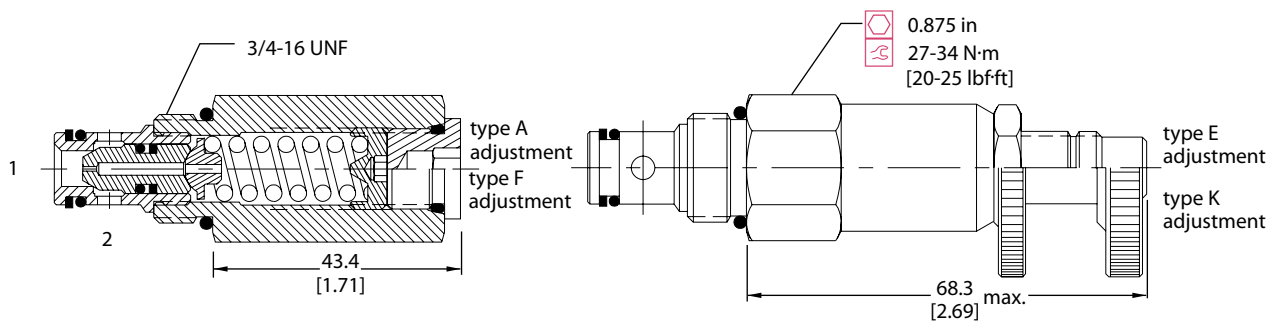

ORDERING INFORMATION

CP208 - 1 - B - 6S - A - C - 150

Seals
- B = Buna-N
- V = Viton

Seal Kit
- 120221
- 120222

Housing and ports

			Housing P/N
0	=	No Housing	No Housing
DG2B	=	Al, 1/4 BSP	SDC08-2-DG-2B
DG3B	=	Al, 3/8 BSP	SDC08-2-DG-3B
4S	=	Al, #4 SAE	CP08-2-4S
6S	=	Al, #6 SAE	CP08-2-6S

Other housings available

Adjustment option
- A = Internal
- E = External
- F = Tamper resistant
- K = Knob

Crack pressure
- Code x 10 = psi
- Example: 150 = 1500 psi

Pressure range

	bar	[psi]
A =	7-69	[100-1000]
Standard	28	[400]
B =	14-138	[200-2000]
Standard	69	[1000]
C =	35-248	[500-3600]
Standard	103	[1500]

ENGINEERING
TOMORROW

Relief Valves Technical Information
Differential Area
CP200-1

OPERATION

This is a direct acting differential area poppet type relief valve that relieves from 2 to 1.

SPECIFICATIONS

Theoretical performance

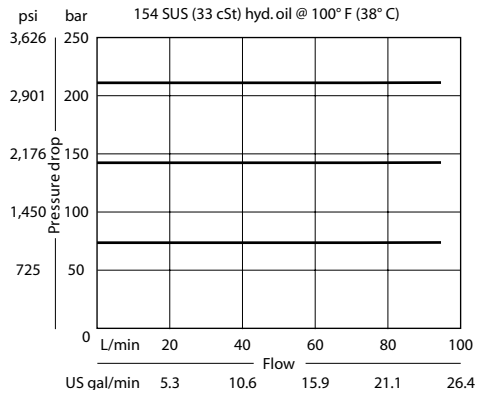

Schematic

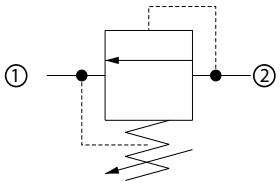

Specifications

Rated pressure	250 bar [3600 psi]
Rated flow	75 l/min [20 US gal/min]
Leakage	10 drops/min @ 80% of pressure setting
Weight	0.21 kg [0.46 lb]
Cavity	**SDC10-2**

DIMENSIONS

mm [in]

Cross-sectional view

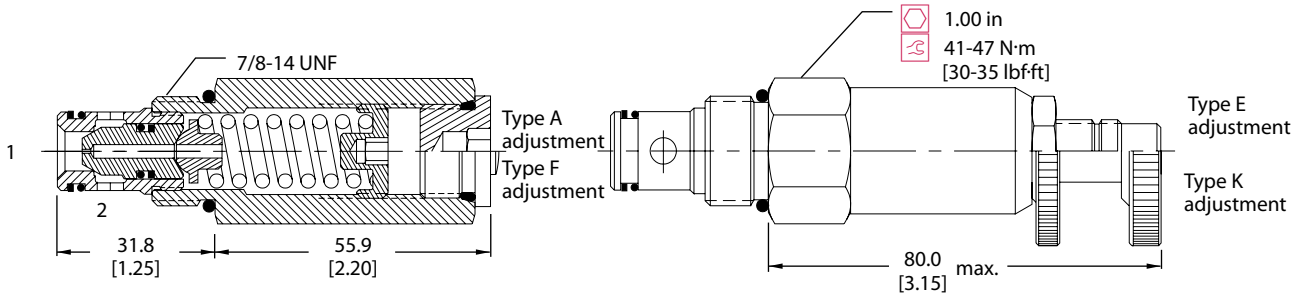

ORDERING INFORMATION

CP200 - 1 - B - 8S - A - C-150

Seals
B = Buna-N
V = Viton

Seal kit
120015
120016

Housing and ports

0	=	No Housing
DG3B	=	Al, 3/8 BSP
DG4B	=	Al, 1/2 BSP
6S	=	Al, #6 SAE
8S	=	Al, #8 SAE

Other housings available

Housing P/N

No Housing
SDC10-2-DG-3B
SDC10-2-DG-4B
SDC10-2-6S
SDC10-2-8S

Adjustment option
A = Internal
E = External
F = Tamper resistant
K = Knob

Crack pressure
Code x 10 = psi
Example: 150 = 1500 psi

Pressure range

	bar	[psi]
A =	7-55	[100-800]
Standard	28	[400]
B =	17-138	[250-2000]
Standard	69	[1000]
C =	41-248	[600-3600]
Standard	103	[1500]

ENGINEERING
TOMORROW

Relief Valves Technical Information

Differential Area

CP201-1

OPERATION

This is a direct acting differential area poppet type relief valve that relieves from 2 to 1.

SPECIFICATIONS

Theoretical performance

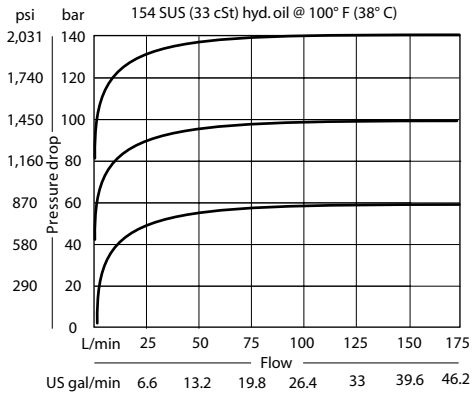

Schematic

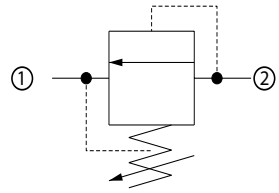

Specifications

Rated pressure	250 bar [3600 psi]
Rated flow	150 l/min [40 US gal/min]
Leakage	10 drops/min @ 80% of pressure setting
Weight	0.42 kg [0.92 lb]
Cavity	**CP12-2**

DIMENSIONS

mm [in]

Cross-sectional view

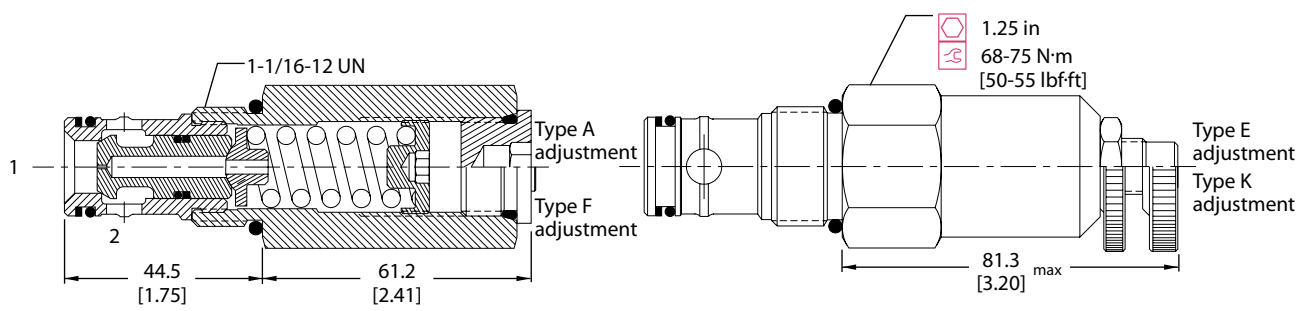

ORDERING INFORMATION

CP201 - 1 - B - 12S - A - C - 150

Seals

			Seal kit
B	=	Buna-N	120017
V	=	Viton	120018

Housing and ports

			Housing P/N
0	=	No Housing	No Housing
4B	=	Al, 1/2 BSP	CP12-2-4B
6B	=	Al, 3/4 BSP	CP12-2-6B
10S	=	Al, #10 SAE	CP12-2-10S
12S	=	Al, #12 SAE	CP12-2-12S

Other housings available

Adjustment option

A	=	Internal
E	=	External
F	=	Tamper resistant
K	=	Knob

Crack pressure

Code x 10 = psi
Example: 150 = 1500 psi

Pressure range

	bar	[psi]
A =	7-69	[100-1000]
Standard	28	[400]
B =	17-172	[250-2500]
Standard	69	[1000]
C =	35-248	[500-3600]
Standard	103	[1500]

ENGINEERING
TOMORROW

Relief Valves Technical Information

Direct Acting

CP210-1

OPERATION

This is a direct acting spool-type relief valve that relieves from 1 to 2.

SPECIFICATIONS

Theoretical performance

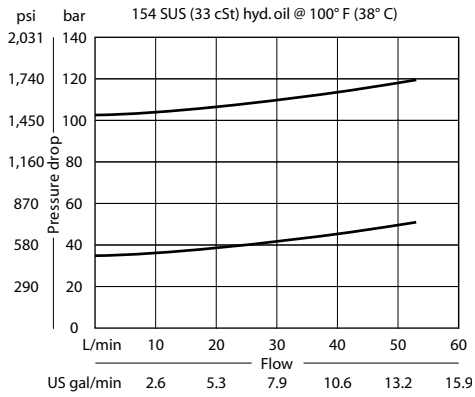

Schematic

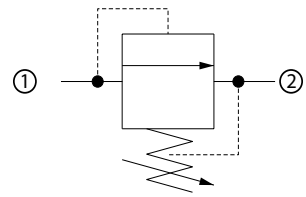

Specifications

Rated pressure	210 bar [3000 psi]
Rated flow	45 l/min [12 US gal/min]
Leakage	82 cm^3/min [5 in^3/min] @ 80% of pressure setting
Weight	0.22 kg [0.48 lb]
Cavity	**SDC10-2**

DIMENSIONS

mm [in]

Cross-sectional view

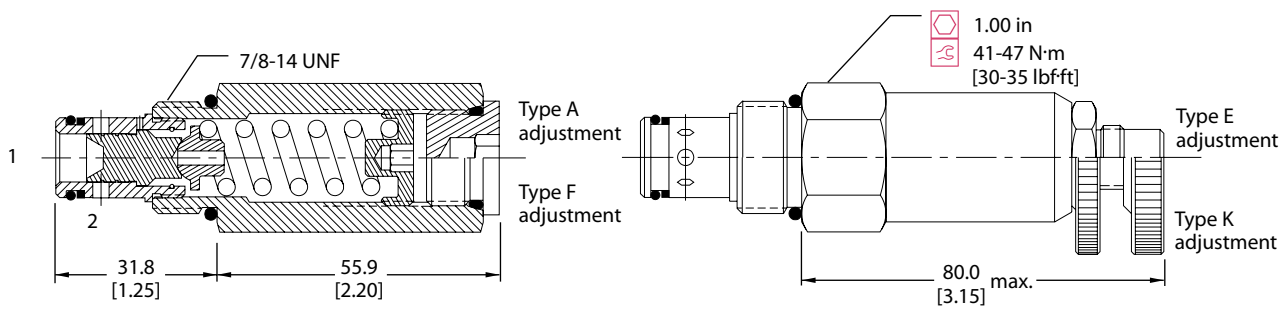

ORDERING INFORMATION

CP210 - 1 - B - 6S - A - C - 075

Seals

B	=	Buna-N
V	=	Viton

Seal kit

120015
120016

Housing and ports

			Housing P/N
0	=	No Housing	No Housing
DG3B	=	Al, 3/8 BSP	SDC10-2-DG-3B
DG4B	=	Al, 1/2 BSP	SDC10-2-DG-4B
6S	=	Al, #6 SAE	CP10-2-6S
8S	=	Al, #8 SAE	CP10-2-8S

Other housings available

Adjustment option

A	=	Internal
E	=	External
F	=	Tamper resistant
K	=	Knob

Crack pressure

Code x 10 = psi
Example: 075 = 750 psi

Pressure range

		bar	[psi]
A	=	3.4-28	[50-400]
Standard		17	[250]
B	=	5.5-55	[80-800]
Standard		28	[400]
C	=	6.9-97	[100-1400]
Standard		52	[750]
D	=	34-166	[500-2400]
Standard		103	[1500]

Relief Valves Technical Information
Direct Acting
CP211-1

OPERATION

This is a direct acting spool-type relief valve that relieves from 1 to 2.

SPECIFICATIONS

Theoretical performance

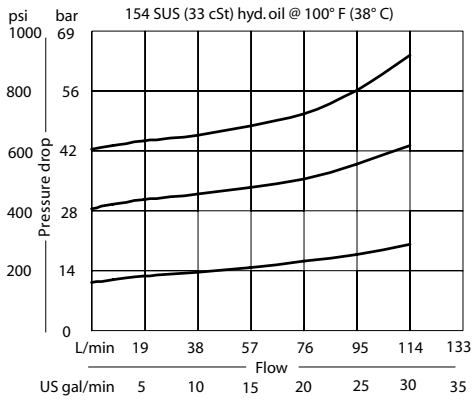

Schematic

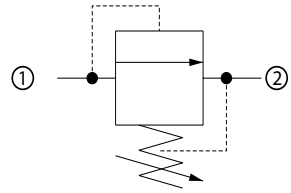

Specifications

Rated pressure	40 bar [600 psi]
Rated flow	75 l/min [20 US gal/min]
Leakage	82 cm^3/min [5 in^3/min] @ 80% of pressure setting
Weight	0.41 kg [0.90 lb]
Cavity	**CP12-2**

DIMENSIONS

mm [in]

Cross-sectional view

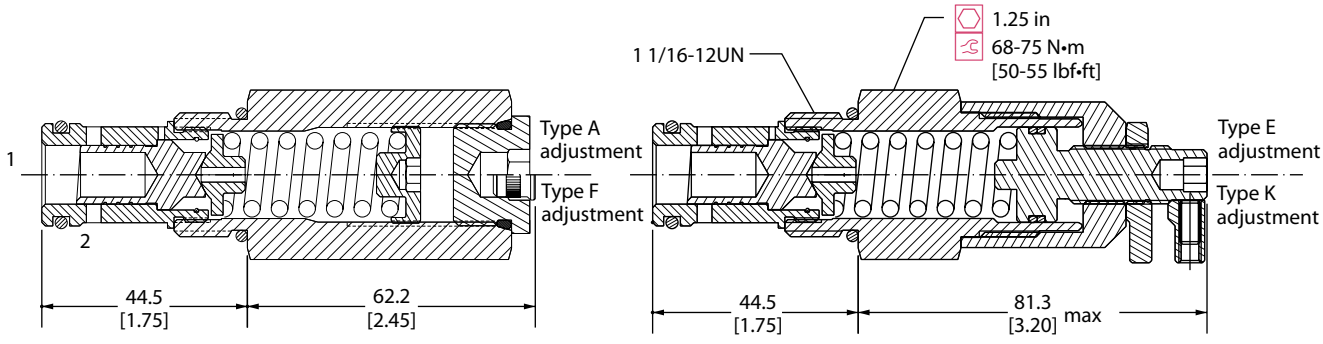

ORDERING INFORMATION

CP211-1-B-10S-A-C-040

Crack pressure
Code x 10 = psi
Example: 040 = 400 psi

Pressure range
A = 0-10 bar [0-150 psi]
B = 3.4-34 bar [50-400 psi]
C = 5.2-41 bar [80-600 psi]

Adjustment option
A = Internal
E = External
F = Tamper resistant
K = Knob

Housing and ports

			Housing P/N
0	=	No Housing	No Housing
4B	=	Al, 1/2 BSP	CP12-2-4B
6B	=	Al, 3/4 BSP	CP12-2-6B
10S	=	Al, #10 SAE	CP12-2-10S
12S	=	Al, #12 SAE	CP12-2-12S

Other housings available

Seals
B = Buna-N
V = Viton

Seal kit
120017
120018

ENGINEERING
TOMORROW

Relief Valves Technical Information
Pilot Operated
CP210-2

OPERATION

This is a pilot operated spool type relief valve that relieves pressure from 1 to 2.

SPECIFICATIONS

Theoretical performance

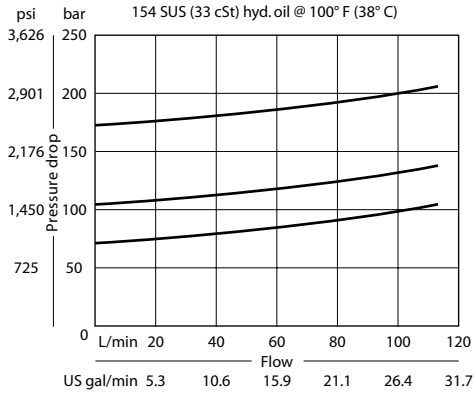

Schematic

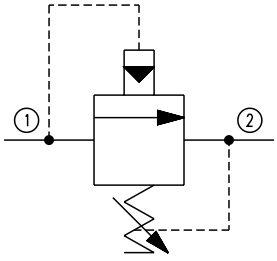

Specifications

Rated pressure	350 bar [5075 psi]
Rated flow	115 l/min [30 US gal/min]
Leakage	82 cm^3/min [5 in^3/min] @ 207 bar [3000 psi]
Weight	0.18 kg [0.40 lb]
Cavity	**SDC10-2**

DIMENSIONS

Cross-sectional view

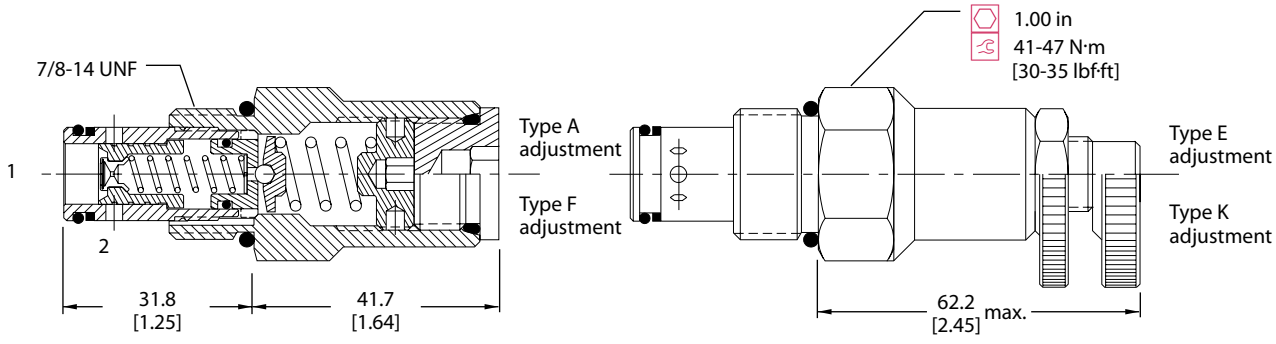

ORDERING INFORMATION

CP210 - 2 - B - 6S - A - C - 150

Seals

			Seal kit
B	=	Buna-N	120015
V	=	Viton	120016

Housing and ports

			Housing P/N
0	=	No Housing	No Housing
DG3B	=	Al, 3/8 BSP	SDC10-2-DG-3B
DG4B	=	Al, ½ BSP	SDC10-2-DG-4B
6S	=	Al, #6 SAE	CP10-2-6S
8S	=	Al, #8 SAE	CP10-2-8S

Other housings available

Adjustment option

A	=	Internal
E	=	External
F	=	Tamper resistant
K	=	Knob

Crack pressure

Code x 10 = psi
Example: 150 = 1500 psi

Pressure range

		bar	[psi]
A	=	14-69	[200-800]
Standard		28	[400]
B	=	14-103	[200-1500]
Standard		69	[1000]
C	=	28-207	[400-3000]
Standard		103	[1500]
D	=	28-345	[400-5000]
Standard		103	[1500]

ENGINEERING
TOMORROW

Relief Valves Technical Information

Pilot Operated

CP211-2

OPERATION

This valve relieves from 1 to 2 and is a pilot operated spool type relief.

SPECIFICATIONS

Theoretical performance

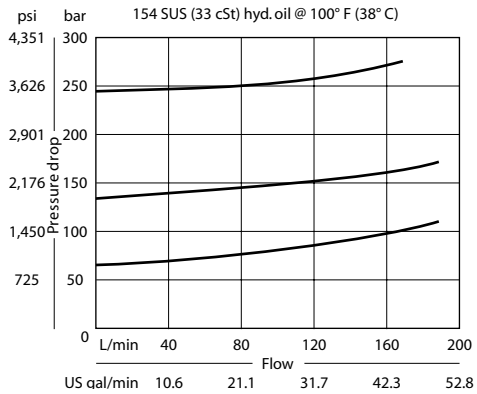

Schematic

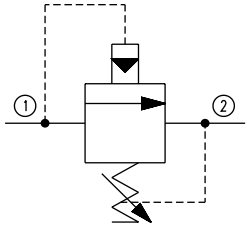

Specifications

Rated pressure	350 bar [5075 psi]
Rated flow	190 l/min [50 US gal/min]
Leakage	82 cm^3/min [5 in^3/min] @ 207 bar [3000 psi]
Weight	0.17 kg [0.37 lb]
Cavity	**CP12-2**

DIMENSIONS

Cross-sectional view

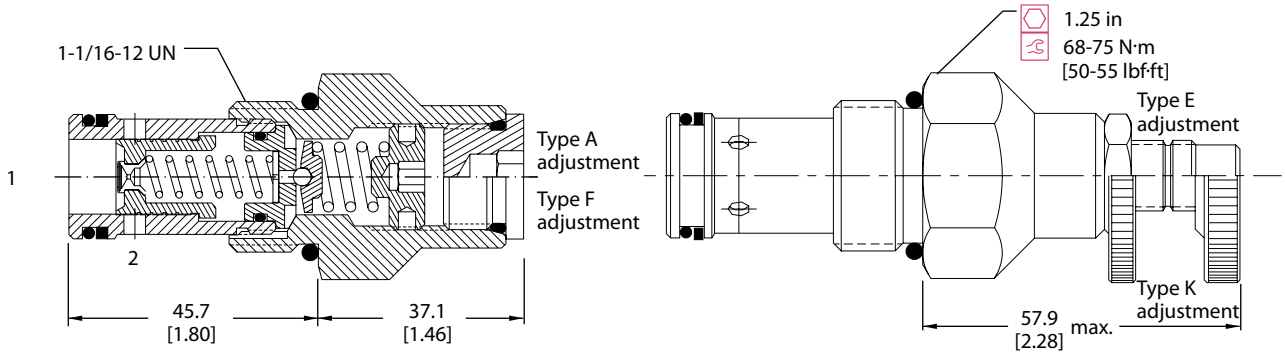

ORDERING INFORMATION

CP211 - 2 - B - 12S - A - C - 150

Seals
B = Buna-N
V = Viton

Seal kit
120017
120018

Housing and ports

			Housing P/N
0	=	No Housing	No Housing
4B	=	Al, 1/2 BSP	CP12-2-4B
6B	=	Al, 3/4 BSP	CP12-2-6B
10S	=	Al, #10 SAE	CP12-2-10S
12S	=	Al, #12 SAE	CP12-2-12S

Other housings available

Adjustment option
A = Internal
E = External
F = Tamper resistant
K = Knob

Crack pressure
Code x 10 = psi
Example: 150 = 1500 psi

Pressure range

	bar	[psi]
A =	14-69	[200-800]
Standard	28	[400]
B =	14-103	[300-1500]
Standard	69	[1000]
C =	28-207	[400-3000]
Standard	103	[1500]
D =	28-345	[400-5000]
Standard	103	[1500]

ENGINEERING
TOMORROW

Relief Valves Technical Information

Pilot Operated
RV10-POP

OPERATION

This is a pilot-operated poppet type relief valve that relieves pressure from 1 to 2, with an integral free-flow check from 2 to 1.

SPECIFICATIONS

Theoretical performance

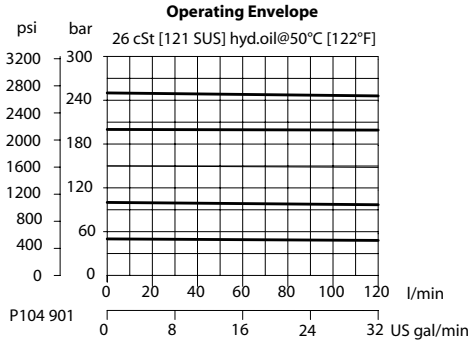

Schematic

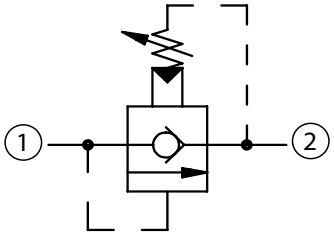

Specifications

Rated pressure	250 bar [3625 psi]
Rated flow	120 l/min [32 US gal/min]
Leakage	6 drops/min @ 80% of pressure setting
Weight	0.22 kg [0.49 lb]
Cavity	**SDC10-2**

DIMENSIONS

Cross-sectional view

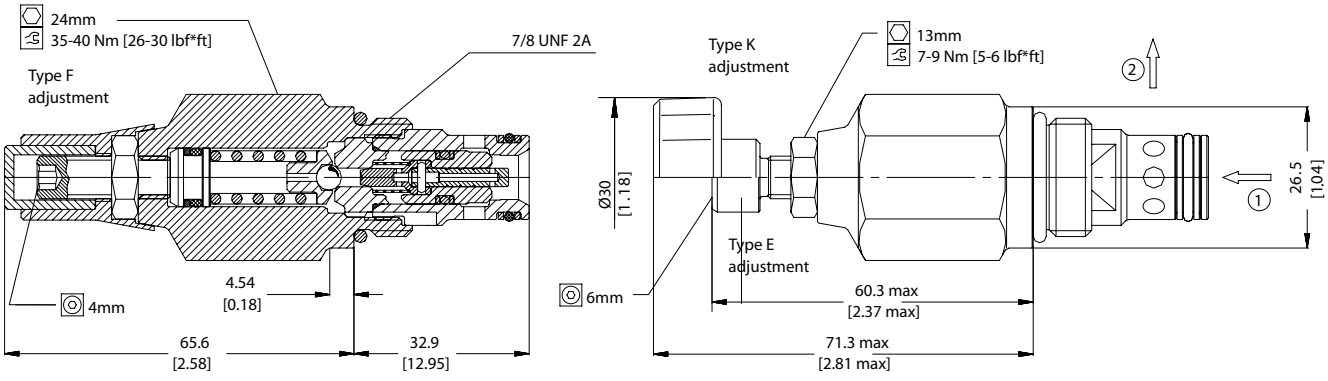

ORDERING INFORMATION

RV10 - POP - 3 - E - XXX - B - 00

Pressure Range
3 = 25-250 Bar [360-3600 psi]

Adjustment option
E = External adjustment
F = Tamper resistant
K = Knob adjustment

Cracking pressure
Code = Std. setting in bar:
100 = 100 Bar [1500 psi]
XXX = No specific setting

Body and Ports
Omit = Cartridge only
6S = Al, #6 SAE
8S = Al, #8 SAE
DG3B = Al, 3/8 BSP
DG4B = Al, 1/2 BSP
Other housing available

Seals / **Seal Kit**
B = Buna-N seals 354004019
V = Viton seals 354003419

Body Nomenclature
No Body
CP10-2-6S
CP10-2-8S
SDC10-2-DG3B
SDC10-2-DG4B

Relief Valves Technical Information
Bi-Directional
CP200-7

OPERATION

This is a bi-directional relief valve that relieves pressure from 1 to 2 and from 2 to 1.

SPECIFICATIONS

Theoretical performance

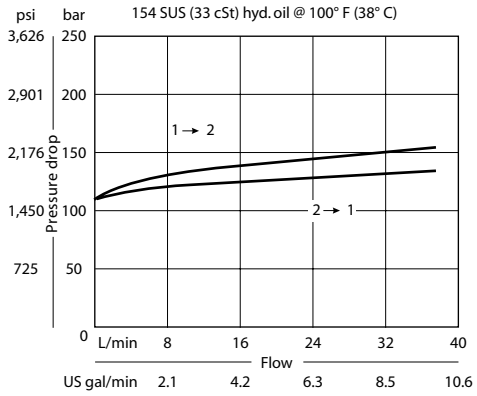

Schematic

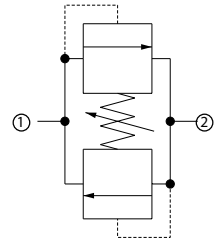

Specifications

Rated pressure	250 bar [3600 psi]
Rated flow	40 l/min [11 US gal/min]
Leakage	5 cm^3/min [0.3 in^3/min] @ 80% of pressure setting
Weight	0.20 kg [0.43 lb]
Cavity	**SDC10-2**

DIMENSIONS

Cross-sectional view

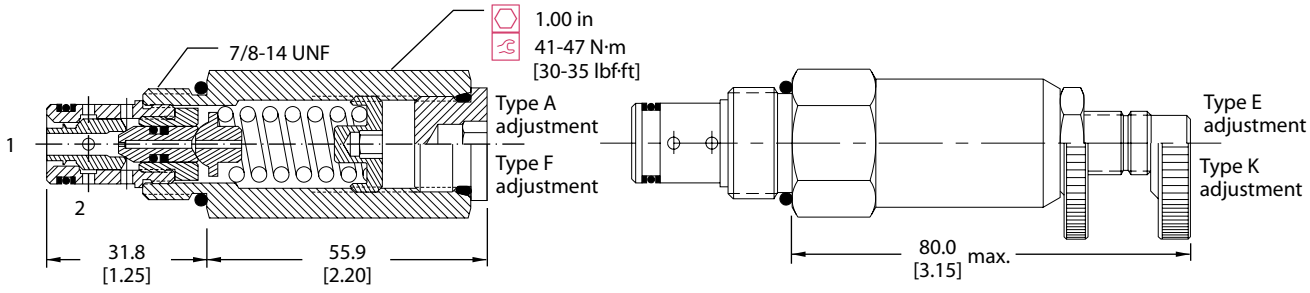

ORDERING INFORMATION

CP200 - 7 - B - 8S - A - C - 150

Seals

			Seal kit
B	=	Buna-N	120073
V	=	Viton	120074

Housing and ports

			Housing P/N
0	=	No Housing	No Housing
DG3B	=	Al, 3/8 BSP	SDC10-2-DG-3B
DG4B	=	Al, 1/2 BSP	SDC10-2-DG-4B
6S	=	Al, #6 SAE	CP10-2-6S
8S	=	Al, #8 SAE	CP10-2-8S

Other housings available

Adjustment option

A	=	Internal
E	=	External
F	=	Tamper resistant
K	=	Knob

Crack pressure

Code x 10 = psi
Example: 150 = 1500 psi

Pressure range

		bar	[psi]
A	=	7-41	[100-600]
Standard		28	[400]
B	=	17-138	[250-2000]
Standard		69	[1000]
C	=	41-248	[600-3600]
Standard		103	[1500]

Relief Valves Technical Information
Differential Area
VSB 06-EN

OPERATION

This is a direct-acting, differential area, poppet-type relief valve that relieves from 2 to 1 with an integral free-flow check from 1 to 2.

SPECIFICATIONS

Theoretical performance

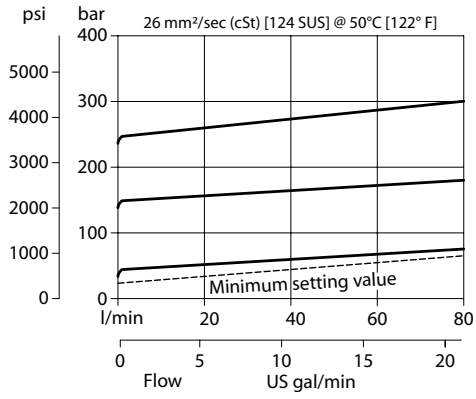

Schematic

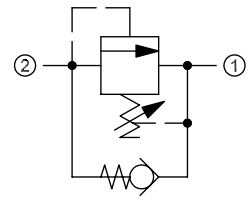

Specifications

Rated pressure	350 bar [5075 psi]
Rated flow	80 l/min [21 US gal/min]
Weight	0.22 kg [0.49 lb]
Cavity	**NCS06/2**

DIMENSIONS

mm [in]

Cross-sectional view

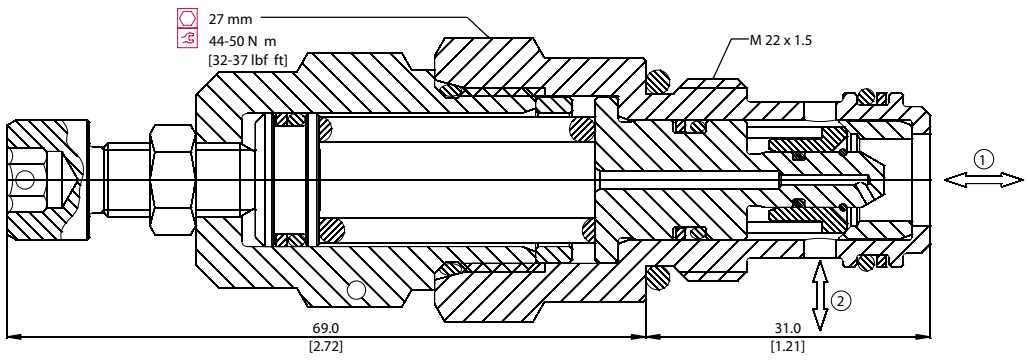

ORDERING INFORMATION

VSB 06-EN - 1 - 00 - V - XXX

Seals
V = Viton — Seal Kit 230000380
Omit = Buna-N — 230000060

Housing and ports

			Housing P/N
00	=	No Housing	No Housing
DG3/8	=	AL, 3/8 BSP	NCS06/2-DG-3/8
DG1/2	=	AL, 1/2 BSP	NCS06/2-DG-1/2
DG6S	=	AL, #6 SAE	NCS06/2-DG-6S
DG8S	=	AL, #8 SAE	NCS06/2-DG-8S

Other housings available

Setting range

1 = 20 - 80 bar [363 - 2031 psi]
2 = 70 - 210 bar [1015 - 3046 psi]
3 = 105 - 350 bar [1523- 5076 psi]

To order this valve with a specific factory setting, contact your Danfoss ICS representative

Relief Valves Technical Information
Differential Area
VSB 12-EN

OPERATION

This is a direct-acting, differential area, poppet-type relief valve that relieves from 2 to 1 with an integral free-flow check from 1 to 2.

SPECIFICATIONS

Theoretical performance

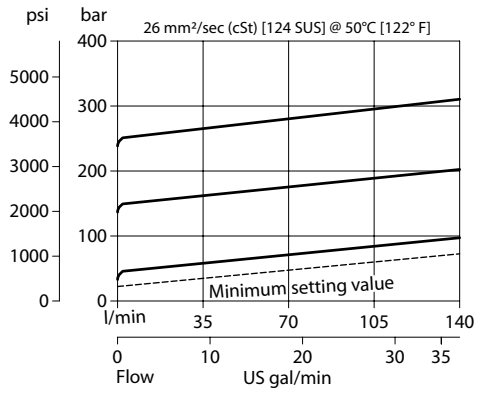

Schematic

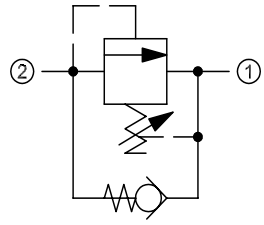

Specifications

Rated pressure	350 bar [5075 psi]
Rated flow	140 l/min [37 US gal/min]
Weight	0.60 kg [1.32 lb]
Cavity	**NCS12/2**

DIMENSIONS

Cross-sectional view

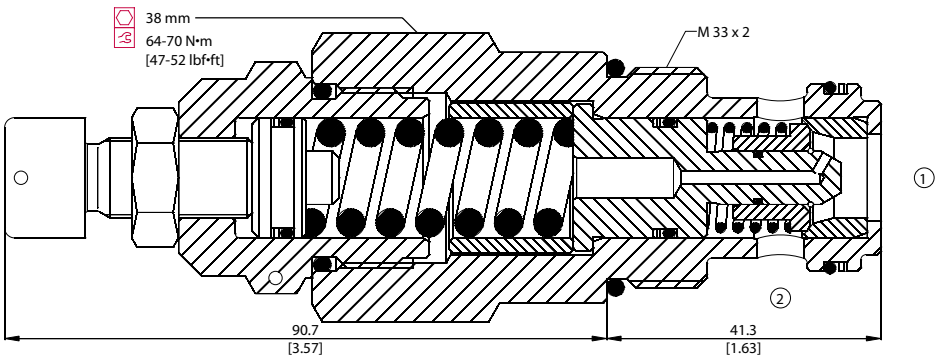

ORDERING INFORMATION

VSB 12-EN - 1 - 00 - V - XXX

Seals
V = Viton
Omit = Buna-N

Seal Kit
230000470
230000120

Housing and ports
00 = No Housing
DG1/2 = AL, 1/2 BSP
DG3/4 = AL, 3/4 BSP
DG8S = AL, #8 SAE
DG12S = AL, #12 SAE
Other housings available

Housing P/N
No Housing
NCS12/2-DG-1/2
NCS12/2-DG-3/4
NCS12/2-DG-8S
NCS12/2-DG-12S

Setting range
1 = 25 - 170 bar [363 - 2466 psi]
2 = 70 - 270 bar [1015 - 3916 psi]
3 = 105 - 350 bar [1523- 5076 psi]

Relief Valves Technical Information
Differential Area
VSB 06-CN

OPERATION

This is a direct-acting, differential area, atmospherically-vented, poppet-type relief valve that relieves from 2 to 1 with an integral free-flow check from 1 to 2.

SPECIFICATIONS

Theoretical performance

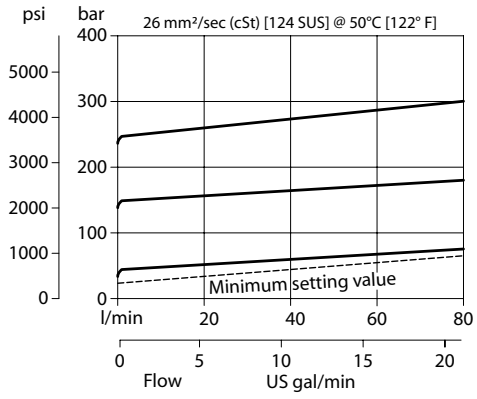

Schematic

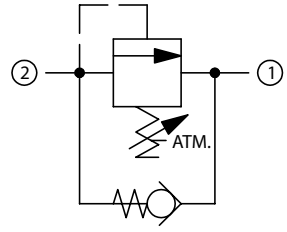

Specifications

Rated pressure	350 bar [5075 psi]
Rated flow	80 l/min [21 US gal/min]
Weight	0.29 kg [0.64 lb]
Cavity	**NCS06/2**

DIMENSIONS

mm [in]

Cross-sectional view

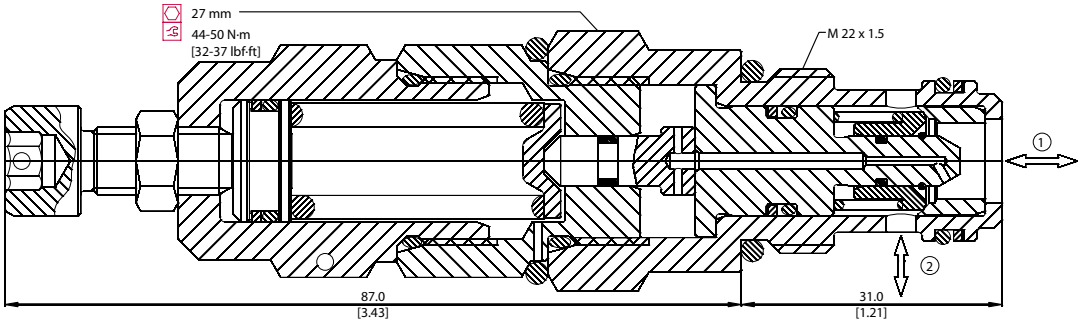

ORDERING INFORMATION

VSB 06-CN - 1 - 00 - V - XXX

Seals
V = Viton — Seal Kit 230000380
Omit = Buna-N — 230000060

Housing and ports — Housing P/N
00 = No Housing — No Housing
DG3B = AL, 3/8 BSP — NCS06/2-DG-3/8
DG4B = AL, 1/2 BSP — NCS06/2-DG-1/2
DG6S = AL, #6 SAE — NCS06/2-DG-6S
DG8S = AL, #8 SAE — NCS06/2-DG-8S
Other housings available

Setting range
1 = 25 - 140 bar [363 - 2031 psi]
2 = 70 - 210 bar [1015 - 3046 psi]
3 = 105 - 350 bar [1523- 5076 psi]

To order this valve with a specific factory setting, contact your Danfoss ICS representative

Relief Valves Technical Information
Differential Area
VSB 12-CN

OPERATION

This is a direct-acting, differential area, atmospherically-vented, poppet-type relief valve that relieves from 2 to 1 with an integral free-flow check from 1 to 2.

SPECIFICATIONS

Theoretical performance

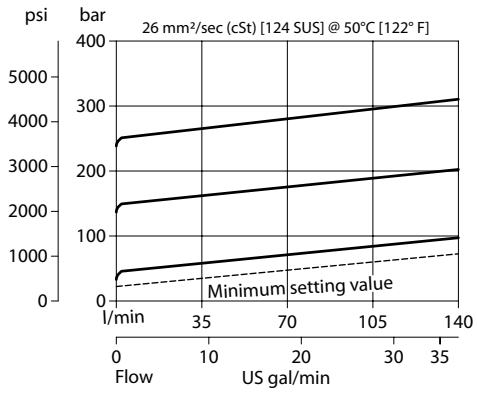

Schematic

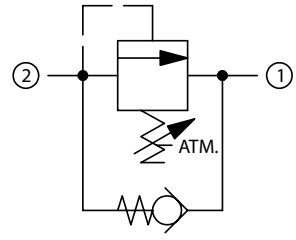

Specifications

Rated pressure	350 bar [5075 psi]
Rated flow	140 l/min [37 US gal/min]
Weight	0.75 kg [1.65 lb]
Cavity	**NCS12/2**

DIMENSIONS

mm [in]

Cross-sectional view

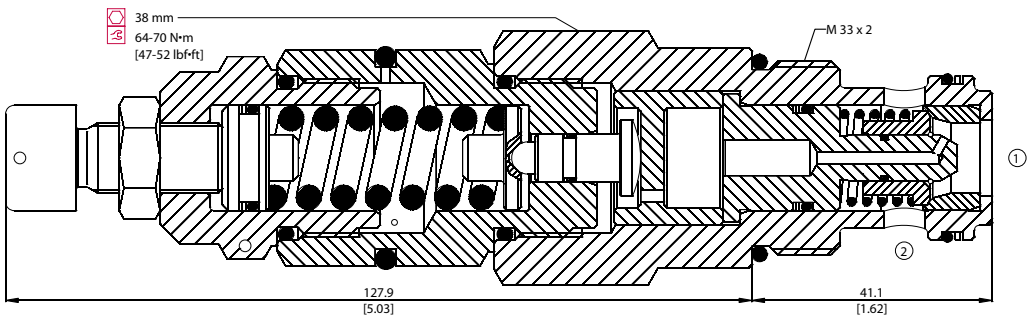

ORDERING INFORMATION

VSB 12-CN - 1 - 00 - V - XXX

Seals
V = Viton — Seal Kit 230000470
Omit = Buna-N — 230000120

Housing and ports — Housing P/N
00 = No Housing — No Housing
DG1/2 = AL, 1/2 BSP — NCS12/2-DG-1/2
DG3/4 = AL, 3/4 BSP — NCS12/2-DG-3/4
DG8S = AL, #8 SAE — NCS12/2-DG-8S
DG12S = AL, #12 SAE — NCS12/2-DG-12S
Other housings available

Setting range
1 = 25 - 170 bar [363 - 2466 psi]
2 = 70 - 270 bar [1015 - 3916 psi]
3 = 105 - 350 bar [1523- 5076 psi]

To order this valve with a specific factory setting, contact your Danfoss ICS representative

Relief Valves Technical Information

Cross-Over

VA-E 06

OPERATION

This valve is an inline cross relief. It uses two VME 06 direct-acting relief valves.

SPECIFICATIONS

Theoretical performance

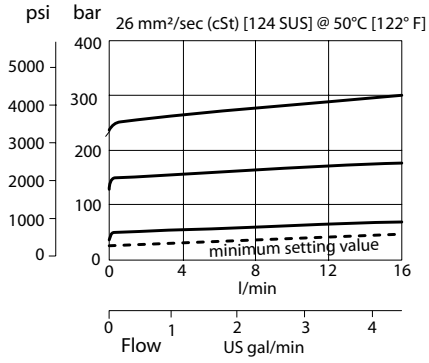

Schematic

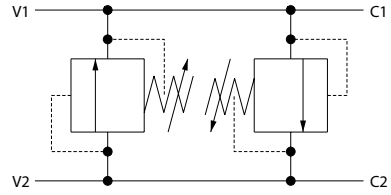

Specifications

Rated pressure	210 bar [3045 psi]
Rated flow	40 l/min [11 US gal/min]
Weight	1.11 kg [2.45 lb]
Cavity	none

DIMENSIONS

mm [in]

Cross-sectional view

Adjustment option E shown, refer to VME 06 catalog page for other options

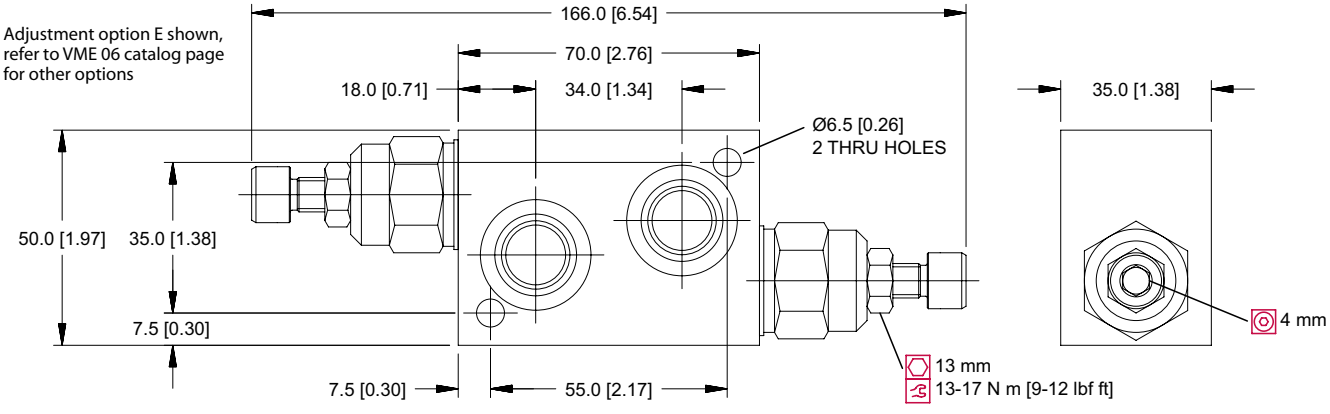

ORDERING INFORMATION

VA-E 06 - EN - 2 - LG - V - XXX

Adjustment option
EN = External screw
M = Handwheel

Setting range
1 = 25 - 70 bar [360 - 1000 psi]
2 = 35 - 170 bar [510 - 2500 psi]
3 = 70 - 315 bar [1000 - 4500 psi]

Housing and ports
LG = AL, 3/8 BSP

Seals
V = Viton
Omit = Buna-N

Seal kit
Consult factory
Consult factory

To order this valve with a specific factory setting, contact your Danfoss ICS representative

Relief Valves Technical Information
Cross-Over
CP220-1

OPERATION

This valve is an inline cross relief. It uses two CP200-1 differential area relief valves.

SPECIFICATIONS

Theoretical performance

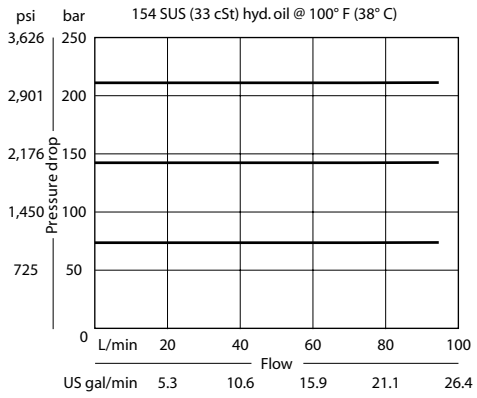

Schematic

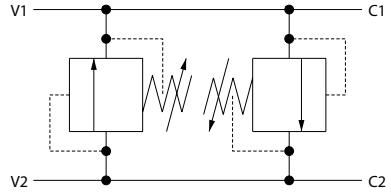

Specifications

Rated pressure	250 bar [3600 psi]
Rated flow	75 l/min [20 US gal/min]
Weight	0.82 kg [1.80 lb]
Cavity	none

DIMENSIONS

mm [in]

Cross-sectional view

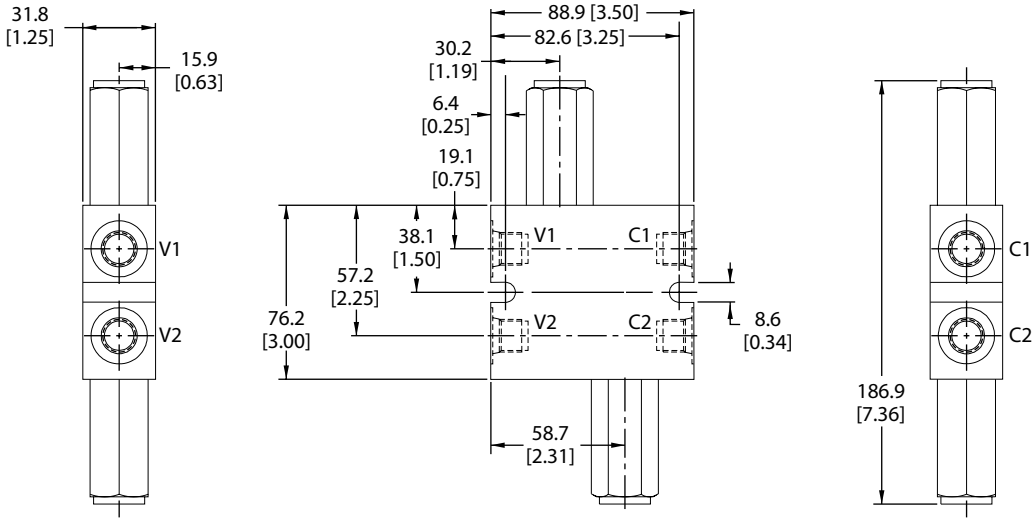

ORDERING INFORMATION

CP220 - 1 - 8S - B-0-A-C-150

Housing and ports

			Housing P/N
3B	=	Al, 3/8 BSP	221743
4B	=	Al, 1/2 BSP	221744
6S	=	Al, #6 SAE	220216
8S	=	Al, #8 SAE	220217

Other housings available

Seals

			Seal kit
B	=	Buna-N	120072
V	=	Viton	120161

Adjustment option

A	=	Internal
E	=	External
F	=	Tamper resistant
K	=	Knob

Crack pressure

Code x 10 = psi
Example: 150 = 1500 psi

Pressure range

	bar	[psi]
A =	7-55	[100-800]
Standard	28	[400]
B =	17-138	[250-2000]
Standard	69	[1000]
C =	41-248	[600-3600]
Standard	103	[1500]

ENGINEERING
TOMORROW

Relief Valves Technical Information

Cross-Over

CP221-1

OPERATION

This valve is an inline cross relief. It uses two CP201-1 differential area relief valves.

SPECIFICATIONS

Theoretical performance

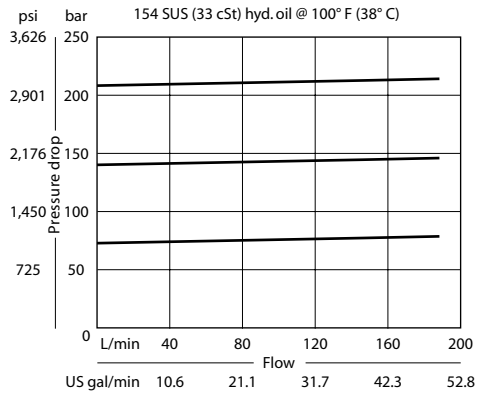

Schematic

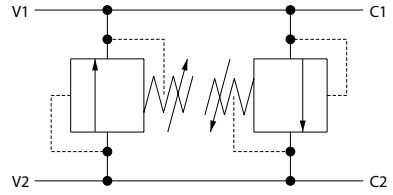

Specifications

Rated pressure	250 bar [3600 psi]
Rated flow	150 l/min [40 US gal/min]
Weight	2.25 kg [4.95 lb]
Cavity	none

DIMENSIONS

mm [in]

Cross-sectional view

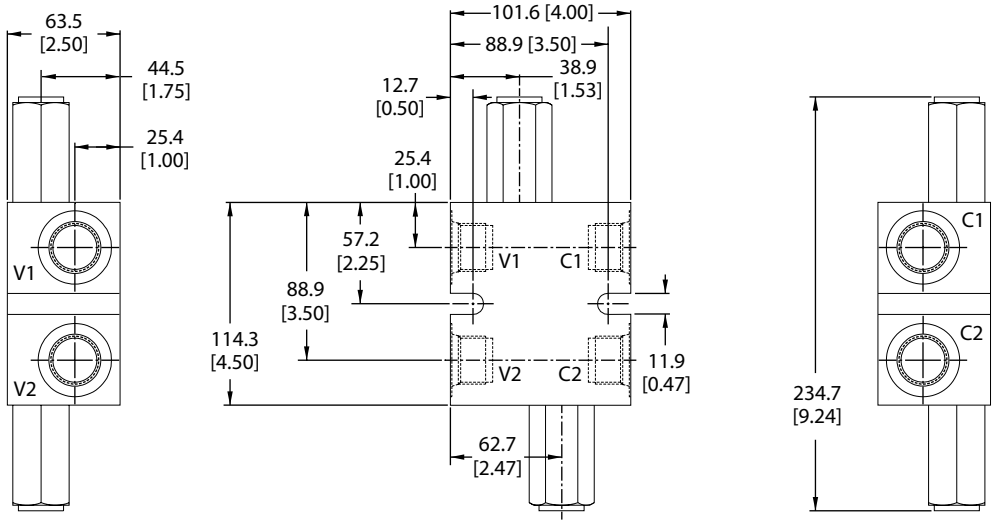

ORDERING INFORMATION

CP221-1 - 16S - B - 0 - A - C - 150

Housings & Ports	Housing P/N
6B: 3/4 BSP, AL	221742
8B: 1 BSP, AL	221690
12S: #12 SAE, AL	220223
16S: #16 SAE, AL	220222

Seal Option

Code	Seal Material	Seal kit
B	Buna	120017
V	Viton	120018

Adjustment Option

A	Internal
E	External
F	Tamper Resistant
K	Knob

Cracking Pressure

Code x 10 = psi

Example: 150 = 1500 psi

Pressure Range

	bar	[psi]
A =	7-69	[100-1000]
Standard	28	[400]
B =	17-172	[250-2500]
Standard	69	[1000]
C =	41-248	[500-3600]
Standard	103	[1500]